DAM-BREAK RISK ASSESSMENT OF DRĂGAN DAM FROM THE UPPER BASIN OF CRIŞUL REPEDE

CS. HORVÁTH

ABSTRACT. – Dam-break risk assessment of Drăgan Dam from the upper basin of Crişul Repede. Although dams reduce the risk of floods, through their realization appears a potential risk that derives from the possibility of the dam-break. The accidental flood, formed as a result of a dam fail, will have catastrophic consequences. In case of dam-break the registered runoff values can be ten times bigger than the natural floods corresponding to the appearance probability of 0,1 %. In the first part of the study we present the general characteristics of the risks generated by a dam fail. In the second part we present a scenario of the dam-break of the Drăgan Dam from the upper basin of the Crişul Repede and its possible effects inducted in the down-stream.

Key words: vulnerability, technical characteristics, dam, Drăgan, Crişul Repede.

1. General considerations

The risk of a dam-break is formed by the probability of failing and the consequences. To determine the probability of a dam-break, it is necessary to identify and calculate the fail type, also the dam structure loading and resistance.

The magnitude of the damages depends on the effected territory social-economic development state and the population density, and from the dam-brake wave characteristics (runoff, volume, speed, duration, level, water column height, length and thickness of the deposits).

The causes which provoke the failing of the dam-breaks were grouped in four categories:

1. disregarding the stability conditions, the dam or the foundation couldn't stand the demanded actions, the failing appearing as tipping, sliding, etc.;
2. disregarding the durability conditions, the dam or the foundation couldn't stand the demanded actions in time, here we mention the infiltrations, the water internal actions, the climatic and chemical actions;
3. disregarding the operational and functional conditions, the structure can't satisfy some functions that can trigger the fault (excessive silting);
4. other causes, here are mentioned natural disasters (earth quakes, flash floods) and antropical causes (terrorism, war) etc.

From the statistics accomplished by I.C.O.L.D. (1995) we observe that the percentage of dam failures is declining. In the U.S. 2,20 per cent of dams built before 1950 failed, failures of dams built since 1951 are less than 0,5 per cent. In absolute terms, most failures involve small dams, which represent however the greatest proportion of dams in service.

Most failures involve newly-built dams. The greatest proportion (70 per cent) of failures occurs chiefly in the first ten years, and more especially in the first year after commissioning. Foundation problems are the most common causes of failure in concrete dams, as a result of internal erosion and insufficient shear strength of the foundation, each accounting for 21 per cent.

Regarding the effects that appear after the dam-break, we separate the break wave effects and the damages caused by the structure infunctionality. The accidental flood waves have catastrophic consequences in the down-stream, especially near to the dam. In these areas in case of a dam-break the peak runoff can be ten times the natural floods with the appearance probability of 0,1 per cent. So there are areas inundated which would never be affected by these type of phenomena.

Although the flood waves of dam-breaks are attenuated more rapidly than the natural floods, because of the proportionally smaller water volume, in the downstream the speed and the power of the phenomenon can cause catastrophic destructions.

There are three important aspects in the prevention of the risks caused by dam-breaks: monitoring, alert and alarm. Also monitoring has two aspects, the hydrological monitoring of the basin and the structural monitoring of the whole hydro technical scheme.

The hydro meteorological monitoring must cover every feature of the basin, so there could not appear any surprises regarding the hydro meteorological phenomena. The structural monitoring is based mostly on redundancy; all lines of information must be doubled, so reducing the possibility of breach in the information spread.

In compliance with these necessary aspects, at the Drăgan Dam was set up one of the first systems of monitoring through telemeasurements, doubling the traditional communication lines and the continuous connection with the center of SC. Hidroelectrica S.A. at Remeți.

2. Drăgan Dam technical characteristics

The Drăgan Dam together with the Floroiu reservoir, placed immediately in down-stream from the Drăgan and Sebeşel rivers confluence, are part of the "Drăgan-Iad" hydroenergetical scheme from the upper basin of Crişului Repede. The Drăgan-Iad hydroenergetical scheme was created to multilaterally exploit the water resources of the Drăgan, Iad and Secuieu river basins.

The physical characteristics of the double curved concrete Drăgan Dam are: height H = 120 m (Fig. 1), maximum volume 124 million m^3, brut volume V = 112 million m^3, useful volume V_u = 100 million m^3 and protection volume (protection against floods) 6 million m^3 water.

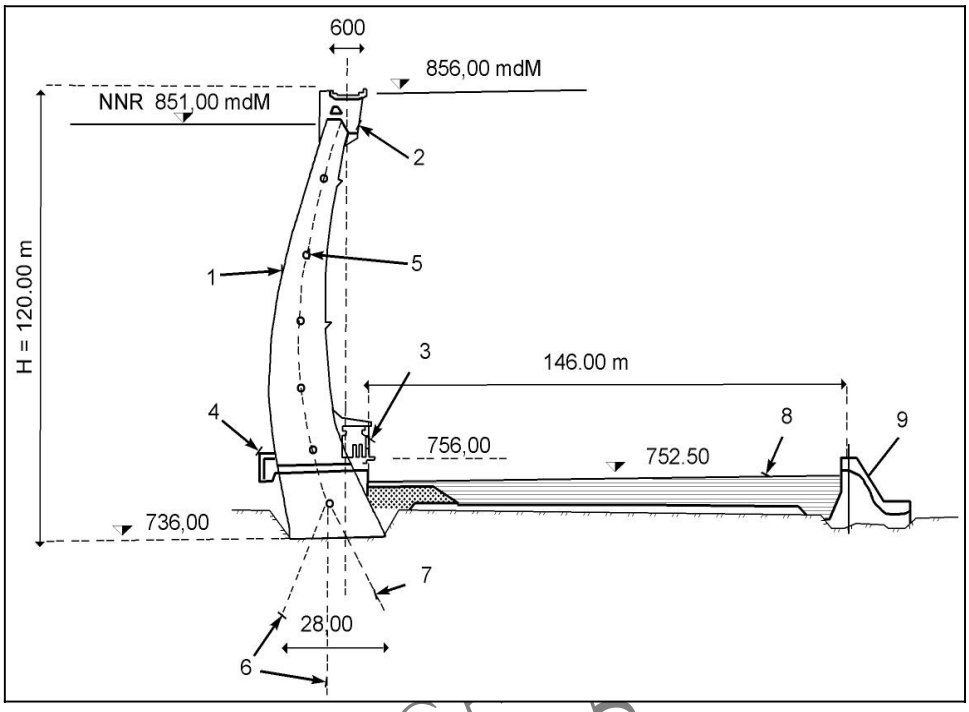

Fig. 1. Drăgan Dam cross-section (St. Ionescu, D. Hulea 1986)
1- dam, 2-spilover, 3- vein house bottom discharge, 4-bottom discharge tweak, 5- visitation and injection galleries, 6- injection veil, 7-draineges, 8- amortization water bed, 9- down-stream edge

The general disposition of the high water spillover has five discharge openings with elliptic profiles of 12,55 m width, these are in the central part of the dam, on the width of the Drăgan River minor river bed. The height of the spillovers is two meters over the normal level of retention and two meters under the superior level of the dam. The lower parts of the spillover are equipped with a trampoline, so that the spillover discharge should fall far away from the dam foundation.

Also for an even better protection of the dam, at 150 m from the down side of the dam there is the down-stream edge, which makes an amortization water bed above the rock, protecting it from erosion.

At base of the dam at 20 m above the foundation there are the two bottom discharges, these have a capacity of 42 m^3/s, so this means a total drain of the

reservoir in maximum 18 days and these can be reduced to 13 days through a continuous functioning of the hydroelectical plant.

3. Evaluation of the dam-break risk at the Drăgan Dam

After the classification by importance of hydroenergetical constructions in Romania, the Drăgan Dam is part of the second class; also it is the second biggest dam in arch after Vidraru. The apparition of a serious fail which could produce an instant break, would have catastrophic consequences on all the settlements in the downstream of the dam, the effects would even reach Oradea.

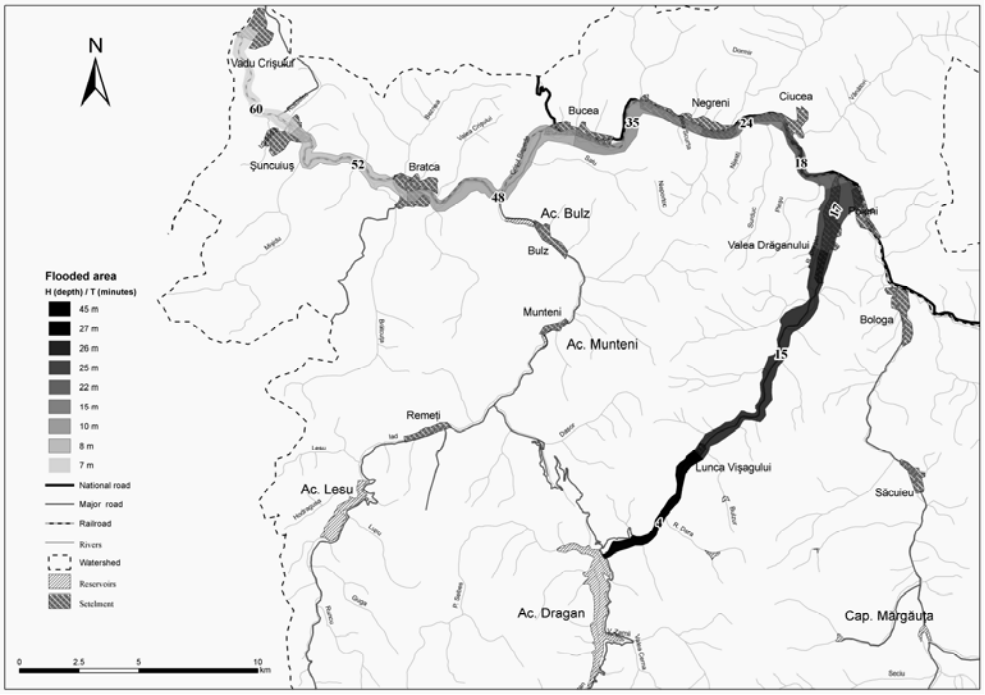

Fig. 2. Flooded settlements in the first sixteen minutes from the dam-break of the Drăgan Dam (S.C. Hidroelectrica S.A.).

The scenario for which the calculations were made, assumes that there is an instant breach in the dam on 200 meters width and in the full height, which would generate a flood with a runoff of 296.364 m^3/s. With these characteristics the flood would affect all the settlements in the downstream of the dam, from which in the first 60 minutes the most important are: Lunca Vişagului, Valea Drăganului, Poieni, Ciucea, Negreni, Bucea, Bratca (Fig. 2.).

The magnitude of such a flood would be catastrophic in the limit of these first 60 minutes (Fig. 4). In the first hour there would be affected 450.000 persons and 14 settlements. The whole valley would be destroyed, the flood wave characteristics being much higher than the recognized total destruction standard (speed of v>2 m/s and head or speed d x v>7 m^2/s).

The Drăgan Dam was projected to overcome extraordinary runoffs till 610 m^3/s water.

From the surface the discharge is made by the five open spillways at the level of 853 m, every spillway being able to discharge 100 m^3/s. Such catastrophical inflows, between 275 m^3/s and 610 m^3/s don't endanger the structure and the stability of the dam, the dam being designed to withstand such pressures.

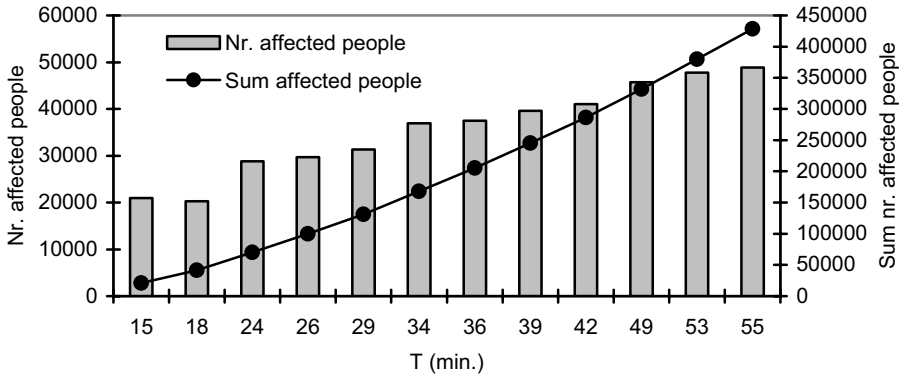

Fig. 3. Number of people affected by the Drăgan Dam dam-break in the first 60 minutes (S.C. Hidroelectrica S.A.)

In case of reaching such catastrophic inflows, the discharge is made according to the dams' operation manual:

1. at a maxim runoff at a calculated flood of 275 m^3/s, in the down-stream the discharge is 217 m^3/s at an 854 meter level. In this case the areas which are gravelly effected are: Zămişoara, Lunca Vişagului, Tranişu-Vale and partially Valea Drăganului village.
2. at a maximum runoff of the flood equal to the expected extraordinary 610 m^3/s water, in the down-stream the discharges is 409 m^3/s (which means an 13,9 % of attenuation) at an 854.6 m height. In this case all the settlements in the valley of the Drăgan River would be destroyed.
3. in case of the multiannual possible maximum (assurance of 0,01%) the high waters are evacuated without overflowing the dam at 855 m height, with catastrophic consequences in the valley.

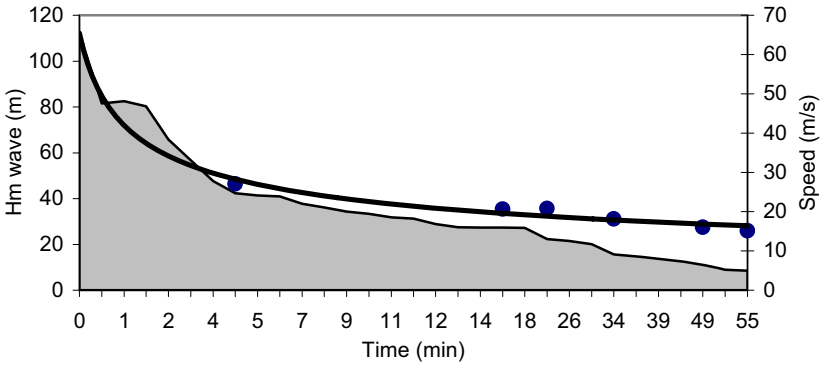

Fig. 4. The flood wave generated by the dam-break at the Drăgan Dam *(S.C. Hidroelectrica S.A.).*

The maximum runoff volume for the bottom discharge is 40 m^3/s. For the diminution of the negative effects of the bottom discharge, in the down-stream at 150 m from the dam there is a reinforced concrete age that assures a retention at 752,5 m, creating a water bed of 12 m which creates an energy apron together with the concrete and rock blocks.

In these conditions the runoff speed is attenuated. Because of the significant runoff (40 m^3/s) discharged form the bottom, the protection zone for preventing the flooding damages must have a width of 15 m on both sides of the minor river bed.

In concordance with the hydroenergetic scheme operation instructions before the periods of high water (regularly in spring) the level of the Floroiu reservoir must be lowered at 825,5 m, so realizing a reserve of 60 millions m^3 of water. This preparing of the Floroiu Lake is made in the cold period of the year when the duration of the electro groups' functionality increases.

In the situation when the level of the reservoir reaches 845 m and it is increasing, both electric groups are activated. If the level of the lake reaches 851 m and the electric groups are functioning continuously (a runoff of 40 m^3/s), the bottom discharges are opened.

Knowing the Drăgan valley climatic and hydrologic characteristics, reaching such extraordinary inflows are slightly possible.

According to the dam classification on safety, the Dăgan Dam is considered a dam with a high safety parameter. In concordance with the quantification of the National Committee on Dams Safety, the safety parameters of the dam are: fail potential (PC = 92); current state of the dam (SB = 65); consequences of an incident (CA = 50); fail parameter (IC = 139); dam associated risks (RB = 0,359).

The fail potential is a parameter which is tied to the dams' type, foundation characteristics, seismic zones, types of discharge and maximum possible runoff. The current state of the dam considers the state of the equipments, the measured parameters and the age of them. The consequences are in direct proportion with the number of the population effected, the economic objectives, the warning system, the bazinal management and the possible ecological consequences.

The fail parameter represents the sum of the parameters of fail potential, of the current state of the dam, of a project parameter (α between 1 and 0,4) and a parameter of incident history (β between 1 şi 0,7):

$$IC = \alpha * PC * \beta * SB$$

In this condition the risk associated to the Drăgan Dam failure is insignificant; the risk is calculated with the formula:

$$RB = \frac{1}{IC} CA = 0{,}359\,,$$

The acceptable risk in the dominion is RB=1, and the significant risk which needs a special supervision is at RB>0,5.

Conclusions

Even if the Drăgan Dam has a high grade of security, because of the catastrophic consequences that could appear in case of a dam-break, it needs a continuous supervision. The development of the telemeasuring system enhances the security, making possible a quicker reaction in case of an incident.

In case of the destruction of a dam, the damages created by the accidental flood are more substantial than of a natural flood, also the probability of dam-break is the highest at high waters which would create the highest damages anyway. The damages are amplified comparatively to a natural slow flood by surprising the population which trusts in the dam protection, the damages are even bigger in case the dam-break happens at night-time.

At the Drăgan Dam the risks are insignificant; the probability of such an extraordinary discharge is very small, based on the measured meteorological and hydrological characteristics of the basin. Also we shouldn't forget that the most incidents and accidents appear because of the superficial conception, execution and exploitation of dams.

Even if these type of incidents are in continuous decline because of the adequate dam supervision and control, we have to keep in mind that there are many variables which we don't fully understand, so it is absolutely necessary to have the best possible prediction and warning system.

REFERENCES

1. Focşa, V. (1980), *Accidentarea barajelor*, Hidrotehnica 23, 5, Bucureşti.
2. Ionescu, Şt., Hulea, D. (1986), *Barajul Drăgan – concepția generală*, Hidrotehnica 31, Bucureşti.
3. Pandi, G. (2002), *Riscul în activitatea de apărare împotriva inundațiilor*, În Vol. "Riscuri şi catastrofe", I, Editor Sorocovschi, V., Edit. Casa Cărții de Ştiință, Cluj-Napoca.
4. Pavel, M. (1975), *Amenajarea hidroenergetică Drăgan pe râul Iad,* Hidrotehnica, 2, Bucureşti.
5. Roşu, C, Crețu, G. (1998), *Inundații accidentale*, Edit. HGA, Bucureşti
6. Schneid,T. D., Collins, L.(2001), *Disaster management and preparedness*, Lewis Publishers, Boca Raton, Florida.
7. Sorocovschi, V. (2002), *Riscuri hidrice,* În vol. „Riscuri şi Catastrofe", I, Editor Sorocovschi, V., Edit. Casa Cărții de Ştiință, Cluj-Napoca.
8. Şerban, Gh., Bursaşiu Liana (2003), *Evaluarea riscurilor la baraje şi a celor induse de colmatarea acumulărilor de pe Valea Someşului Cald.* În vol. „Riscuri şi Catastrofe", II, Editor Sorocovschi, V., Edit. Casa Cărții de Ştiință, Cluj-Napoca.
9. * * * (1973), ICOLD *Dam Accidents*. International Commission on Large Dams.
10. * * * (1995), ICOLD *Dam failures statistical analysis*. Buletin 99. International Commission on Large Dams.
11. * * * (1996), PATZP *Lacul Floroiu şi Valea Drăganului*, Consiliul Județean Cluj, Cluj-Napoca.
12. * * * (1983, 2003), *Analiza comportării construcțiilor hidroenergetice, pentru amenajarea Drăgan* - Criş, SC. Hidroelectrica. S.A
13. * * * *ORDIN nr. 115 din 11 februarie 2002 – pentru aprobarea metodologiei privind stabilirea categoriilor de importanță a barajelor* - Ministerul Apelor şi Protecției Mediului -